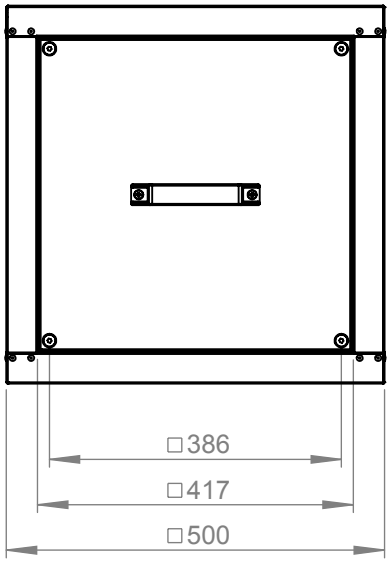

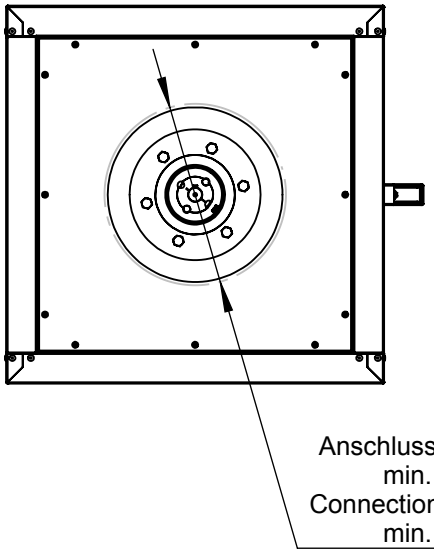

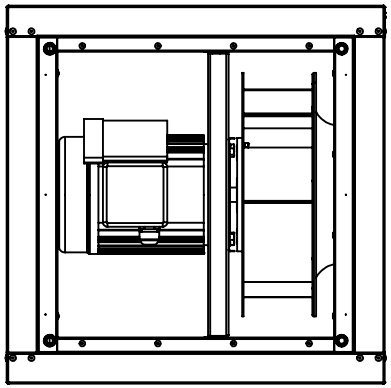

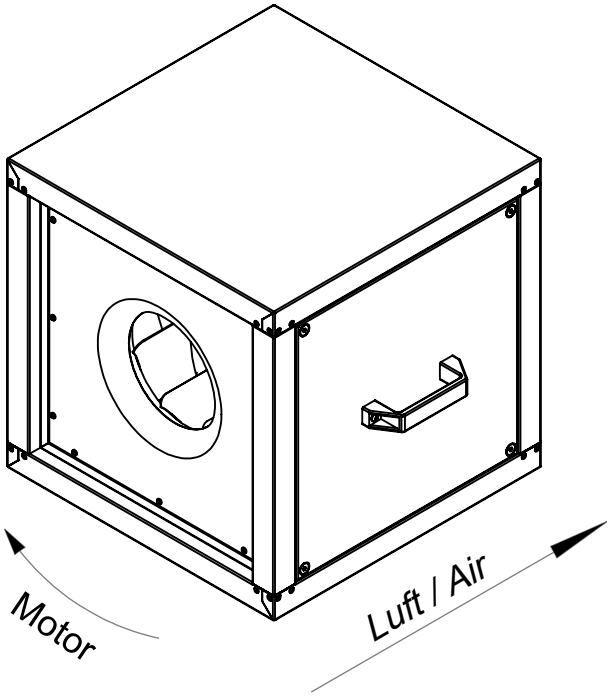

ruck Ventilatoren
Max-Planck-Str. 5
D-97944 Boxberg

1:10 A4 mm

Protection Mark according to ISO16016

General tolerances DIN ISO 2768-c

Drawn: s.pop 12.09.17
Created: a.mezei 19.11.12
Changed:

MPC280E220+

126657 02